MOTORS FOR SCREWDRIVING APPLICATIONS WITH SLIP-TRK CLUTCH

ALFB FR SERIES - Non-reversible

WATT: 190 / CONSUMPTION: 480 Nl/1'

Data sheet
ALFB3DFR

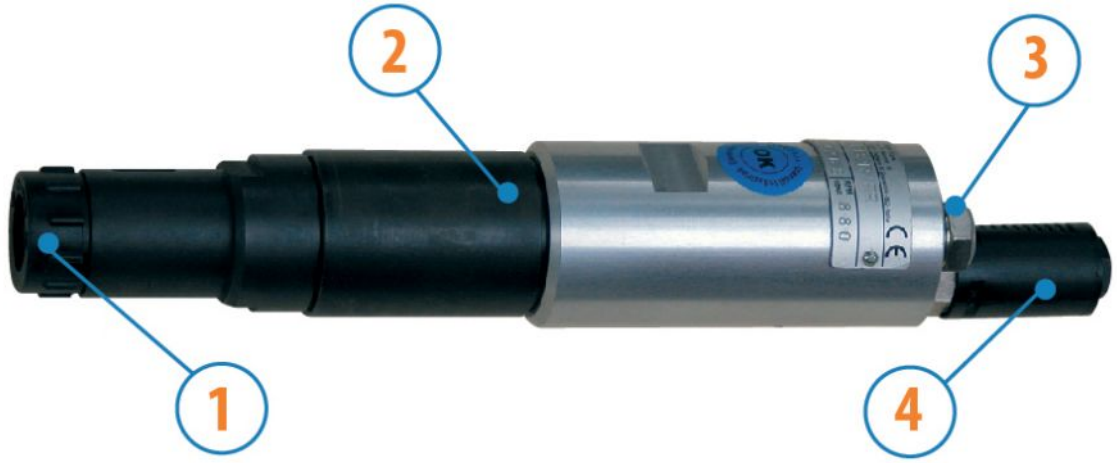

1. 1/4" hexagonal bit holder connection
2. Grip zone
3. Air inlet
4. Air exhaust

Technical specification

Right rotation - Model	ALFB3DFR
Right rotation - Code	8604203
No-load speed - rpm/min	800
Torque Nm - Nm	8,4
Screws tightening	M4-M5
Clutch spring	Neutral
Clutch unit	7311143

Form features

Allow the tightening torque to be adjusted through a friction clutch.
Output shaft with axial sliding (3 mm), on request without scrolling.
Standard bit holder coupling 1⁄4" (6.35 mm).

MOTORS FOR SCREWDRIVING APPLICATIONS WITH SLIP-TRK CLUTCH

ALFB FR SERIES - Non-reversible

WATT: 190 / CONSUMPTION: 480 Nl/1'

Data sheet
ALFB3DFR

Overall dimensions

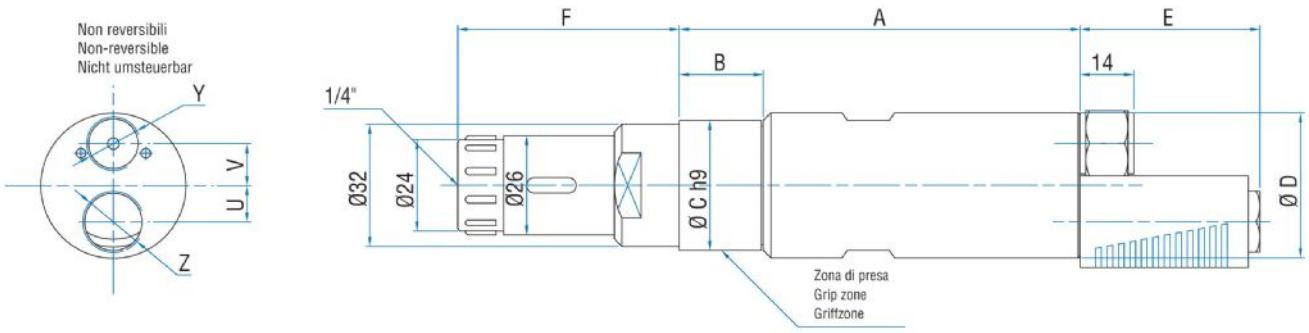

Model	Code	A	B	C	D	E	F	U	V	Y	Z
ALFB3DF	8604203	129,	46,7	34	38	47	58	9,5	11	1/4"	3/8"